Non-metallic wear parts design criteria

COPY COMPLIANT to the original document resident on the computer system at the time of printing

Index

1. Purpose. 3
2. Abbreviations. 3
3. Scope. 3
4. Running clearances. 3
5. Calculation of running clearances. 4
5.1. Interference fit. 4
5.2. Thermal expansion. 6
5.3. Fluid absorption. 6
5.4. Centrifugal effect. 6
6. Material selection. 7
7. Installation. 8
7.1. Hydraulic press. 9
7.2. Freeze fitting. 9
7.3. Thermal fitting. 9
8. Securing methods. 10
8.1. Face screws. 10
8.2. Radial Pins. 11
8.3. Cross section screws. 12
8.4. Adhesive / Glue. 12
9. References. 12
10. Appendix. 13
10.1. Calculation tool. 13
10.2. Case studies. 14
10.2.1. Job 23S021. 14

COPY COMPLIANT to the original document resident on the computer system at the time of printing

1. Purpose.

This document describes the guidelines to be considered and adopted for the design of non-metallic polymeric components, such as wear rings and bearings.

2. Abbreviations.

PLB Product Lubricated Bearing

3. Scope.

This procedure is applicable to horizontal pumps, where non-metallic polymeric static components (such as wear rings and bearings) are adopted.

4. Running clearances.

The running clearances are defined on the basis of the applicable standards and the operating conditions.

As general considerations, the non-metallic polymeric materials provide better anti-galling properties than the hardened or hard-faced steel. For this reason, lower running clearances can be used with the consequent improvement of the pump volumetric efficiency. As general note, the running clearances can be reduced up to 50% of the minimum clearances as per API 610 standard's Table 6. However, it is strongly recommended to perform rotordynamic analysis for the design's validation.

The running clearance shall be calculated considering the following effects:

1) The interference fit between the polymeric component and the relevant seat brings to a reduction of the internal diameter.
2) The operating temperature brings significant thermal deformation (expansions or compression) if it differs substantially from the ambient temperature at installation.
3) The fluid absorption could lead to significant variations of the component's dimensions. This is highly affected by the type of polymeric material.
4) When the pump is operating at a certain speed, the rotor components are subject to the centrifugal load, which affects and modifies the clearances considered during assembly. Anyway, it must be said that this effect does not usually bring significant modifications to the original geometry of pump components, since the pump running speeds are commonly not very high.

COPY COMPLIANT to the original document resident on the computer system at the time of printing

5) During operation the fluid pressure acts on all the wet pump components and modifies their dimensions. This contribution is neglected, since it is not very significant, and it is not easy to estimate the effective pressure distribution of the fluid inside the pump.

The machining drawings and the nominal dimensions of non-metallic components shall be defined on the basis of the required running clearances and the dimensions of the steel housings for both rotor and stator. In the following, it is reported how the above mentioned effects shall be considered to perform a preliminary estimation of the final dimensions of the wear component, in order to match the required running clearance after assembly and during operation.

However, it is recommended that the final dimensions of the component are defined by the raw material / wear component's manufacturer.

5. Calculation of running clearances.

In the following, the above mentioned effects, which may affect the running clearances, are described, along with the calculation methods used for their estimation.

The approach considered in the calculation is reported in the flowchart in Figure 5-1.

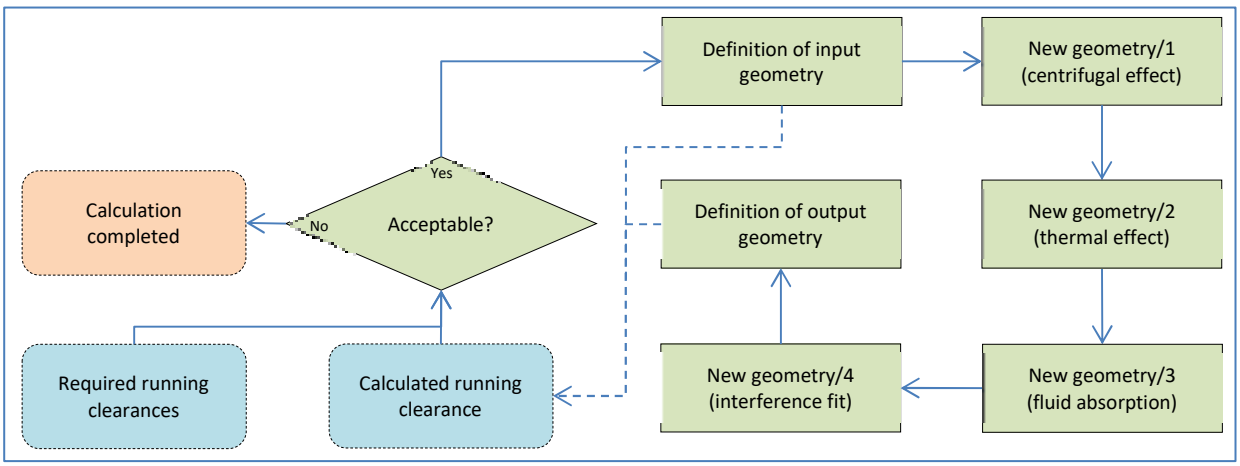

Figure 5-1 Flow chart.

5.1. Interference fit.

On the basis of Nieman's Manuale degli Organi delle Macchine, in case of interference fit between an internal and an external cylindrical component the following is defined:

$$Q_I = \frac{D_{Ii}}{D_{Ia}}$$

$$Q_A = \frac{D_{Ai}}{D_{Aa}}$$

COPY COMPLIANT to the original document resident on the computer system at the time of printing

$$\Delta D_{Ia} = -\frac{p_F}{E_I} D_{Ia} \left(\frac{1 + Q_I^2}{1 - Q_I^2} - \upsilon_I \right)$$

$$\Delta D_{Ai} = \frac{p_F}{E_A} D_{Ai} \left(\frac{1 + Q_A^2}{1 - Q_A^2} + \upsilon_A \right)$$

$$P = \Delta D_{Ia} + \Delta D_{Ai}$$

$$\xi = \frac{P}{D_{IF}} = \frac{P}{D_{AF}}$$

Where:

- D_{Ii} [mm] and D_{Ia} [mm] are respectively the internal and the external diameters of the inner component.
- D_{Ai} [mm] and D_{Aa} [mm] are respectively the internal and the external diameters of the outer component.
- E_I [GPa] and v_I [-] are respectively the Young's modulus and the Poisson ratio of the inner component's material.
- E_A [GPa] and v_A [-] are respectively the Young's modulus and the Poisson ratio of the outer component's material.
- ΔD_{Ia} [mm] is the variation of the inner component's outer diameter due to the interference fit.
- ΔD_{Ai} [mm] is the variation of the outer component's inner diameter due to the interference fit.
- p_F [MPa] is the contact pressure between the inner and the outer component due to the interference fit.
- P [mm] is the diametral interference between the inner and the outer component.

On the basis of Roark's Formulas for Stress and Strain, the variation of the inner component's internal diameter is calculated as in the following:

$$\Delta b = \frac{-q}{E_i} \frac{2a^2 b}{b^2 - a^2}$$

Where:

- a [mm] and b [mm] are respectively the internal and the external diameters of the inner component.
- E_i [GPa] the Young's modulus of the inner component's material.

COPY COMPLIANT to the original document resident on the computer system at the time of printing

- q [MPa] is the contact pressure between the inner and the outer component due to the interference fit.

5.2. Thermal expansion.

In case of temperature variation, the new dimensions of each component are calculated as in the following:

$$D_f = D_i \cdot (1 + \lambda \cdot \Delta T)$$

Where:

- D_i [mm] and D_f [mm] are respectively the initial and the final dimension of the component in subject.
- λ [1/°C] is the thermal expansion coefficient of the base material.
- ΔT [°C] is the temperature variation.

5.3. Fluid absorption.

Non-metallic polymeric materials may be affected by significant fluid absorption and volume variation during operation.

The raw material manufacturers usually provide an absorption coefficient, which represents the relative increase in percentage of the original volume.

In this case, the new dimensions of the component are calculated as in the following:

$$D_f = D_i \cdot \left(1 + \frac{\varepsilon}{3}\right)$$

Where:

- D_i [mm] and D_f [mm] are respectively the initial and the final dimension of the component in subject.
- ε [%] is the volume expansion coefficient of the base material due to the fluid absorption. It is considered that the expansion s the same in all the directions.

5.4. Centrifugal effect.

When the pump is operating, the rotor components are subject to the centrifugal force, which affect their dimensions. The more the speed is high, the more this effect is relevant.

On the basis of Shigley's Mechanical Engineering Design and Roark's Formulas for Stress and Strain, the following formulas apply:

COPY COMPLIANT to the original document resident on the computer system at the time of printing

$$\Delta R_o = \frac{\rho\,\omega^2\,R_o}{4\,E}\cdot\left[(1-\nu)\cdot {R_o}^2 + (3+\nu)\cdot {R_i}^2\right]$$

$$\Delta R_i = \frac{\rho\,\omega^2\,R_i}{4\,E}\cdot\left[(3+\nu)\cdot {R_o}^2 + (1-\nu)\cdot {R_i}^2\right]$$

Where:

- R_o [mm] and R_i [mm] are respectively the outer and the inner radii.
- ΔR_o [mm] and ΔR_i [mm] are the radii variations respectively at outer and the inner radii.
- E [GPa], ν [-] and ρ [kg/m^3] are respectively the Young's modulus, the Poisson ratio and the density of the component's base material.
- ω [rad/s] is the rotational speed.

6. Material selection.

The non-metallic material shall be selected on the basis of the relevant project requirements and shall be suitable for the operating fluid. Typical used materials are reinforced polymeric matrix composites, which provides many benefits such as high corrosion resistance, high operating temperature, non-seize and non-galling properties, preferential wearing in case of contacts with steel rotating parts. These make them highly suitable for the application of pump wear components (such as wear rings, PLBs, sleeves, balancing counterdisks).

In the following a brief list of the main materials type is reported:

1. Carbon-filled PEEK polymer based materials:
   PEEK is a polyether ether ketone based thermoplastic polymer. It is the matrix base material, which is commonly reinforced with carbon fibers.
   On the basis of the carbon-fiber type, the properties of the composite material differ:
   a) PEEK reinforced with short and random carbon fibers, which provides good wear resistance. Typical commercial material is Greene Tweed WR® 300.
   b) PEEK reinforced with continuous hoop-wound carbon fibers, which provides highest pressure applications and best wear resistance. Typical commercial material is Greene Tweed WR® 525.
   c) PEEK reinforced with woven carbon fibers, suitable for sub-zero up to 480°F/249°C temperature applications. Typical commercial material is Greene Tweed WR® 575.
   d) PFA reinforced with short, random carbon fiber
2. Polytetrafluoroethylene (PTFE) based materials:

COPY COMPLIANT to the original document resident on the computer system at the time of printing

a) Filled PTFE with good abrasion resistance and suitable for sub-zero up to 120°F/50°C temperature applications. Typical commercial material is Greene Tweed AR® 01.

b) Blend of PTFE and PEEK, which provides best abrasion resistance and suitability for sub-zero up to 250°F/120°C temperature application. Typical commercial material is Greene Tweed AR® HT.

c) Composite-made bearing holder to replace bronze, super duplex or S.S. in corrosive environment applications. Typical commercial material is Greene Tweed Xycomp® Holder.

3. Carbon reinforced perfluoroalkoxy alkanes (PFA) based materials:

   These materials usually offer excellent dimensional stability, chemical resistance and large temperature range, which make them suitable for use in pump wear rings, vertical pump shaft bearings, throat bushings, throttle bushings and similar wear parts in centrifugal pumps. The characteristics of these composite materials are temperature capabilities from cryogenic to 500°F/260°C, low thermal expansion coefficient if compared to the steel's one, easy machining and installation. Typical commercial material is Dupont™ Vespel® CR-6100.

This section shall be intended as reference only. As general recommendation, the material shall be properly selected for each different case with the manufacturer's support on the basis of the operating conditions.

7. Installation.

Regardless of installation method, it is recommended that users install press-fitted components semi-finished on the dynamic surface. After installation, the dynamic surface should be finished to the designed clearance diameter. Finishing the dynamic surface after installation allows for maximum control of critical size and geometric tolerance. When finish machining is not possible, the dynamic surface diameter can be estimated to change by the same amount as the interference between case/carrier and composite.

Like other ring-shaped plastics, composite components are machined from tube stock and subject to a phenomenon referred to as "egging". Egging is the term used to describe a circular component that is slightly out of round in a free state. This will occur after parts are machined and removed from the clamping fixture and is usually no more than 0.001/0.0015 inches [0.025/0.038 mm] per inch diameter. Installed components will conform to the mating hardware after installation and when finish machined can be held more concentric to the hardware (generally 0.003 inches [0.076 mm] concentricity).

COPY COMPLIANT to the original document resident on the computer system at the time of printing

7.1. Hydraulic press.

It is standard practice for abrasive resistant thermoplastic and carbon-fiber reinforced compression molded PEEK that have been designed for interference fit to be installed using a hydraulic press. Ensure lead-in chamfers (and pilot if interference is greater than 1/32” / .80 mm) on both the insert and the housing are present and sharp edges are removed on the metal bore. A plate shall be used to cover the entire top surface of the composite to distribute pressure evenly during installation. Light oil may be used as a lubricant for installation but is not required.

It is acceptable for some carbon-fiber reinforced compression molded PEEK components with less than .008” / .20 mm interference to be installed via hydraulic press. Due to the high stiffness of the material, installation via hydraulic press for carbon-fiber reinforced compression molded PEEK can be difficult and near impossible for parts longer than 1 inch [25 mm]. In such cases, installation via thermal fitting is recommended. If not possible, parts may be designed for a slip fit (OD .002/.005” / .05/.13 mm undersized to bore) and parts shall be mechanically secured after installation.

For parts made from more than one segment, standard installation via hydraulic press may be difficult. An alternate part design (with reduced interference) or alternate installation method should be considered.

7.2. Freeze fitting.

As an alternative to hydraulic press installation for inserts made from abrasive resistant thermoplastic, these parts can be freeze-fitted. Liquid nitrogen and dry ice are common cooling agents for freeze fitting. The entire insert shall be completely submerged by the cooling agent until sufficient shrinkage has occurred. Depending on the size of the part, generally one hour is sufficient soak time. Freeze fitting is not recommended for parts made from carbon-fiber reinforced compression molded PEEK.

Experienced staff shall be responsible for the handling of either liquid nitrogen or dry ice. Safe handling and ventilation of these cooling agents is beyond the scope of this document.

7.3. Thermal fitting.

As an alternative to installation via hydraulic press for carbon-fiber reinforced compression molded PEEK parts, the casing can be heated for installation. When using this method of installation, it is important that the casing be heated to a high enough temperature such that the minimum diameter is at least 0.001 inches [0.025 mm] larger than the maximum composite diameter. To avoid potential heat damage to the composite component the maximum temperature shall be limited on

COPY COMPLIANT to the original document resident on the computer system at the time of printing

the basis of the carbon-fiber reinforced compression molded PEEK's characteristics and maximum acceptable temperature. Direct flame exposure shall be avoided. This method of installation may not be possible with the elevated interference values for components designed for high temperature operation.

If this alternate method is not feasible for installation, carbon-fiber reinforced compression molded PEEK parts may be designed for a slip fit (OD .002/.005" / .05/.13 mm undersized to bore) and shall be mechanically secured in place.

Due to the increased risk of exposure to temperatures above the recommended upper temperature limit, it is recommended that abrasive resistant thermoplastic and carbon-fiber reinforced compression molded PEEK with lower maximum temperature not be fitted in this manner.

8. Securing methods.

Interface pressure due to interference is generally sufficient to keep press fitted composites from spinning or moving axially under normal operating conditions. For floating components, higher pressure applications or as added security, inserts can be mechanically secured.

Outer diameter of insert [inches]	Outer diameter of insert [mm]	Number of screws / pins
Up to 5.999	Up to 152.99	3
6.000 – 9.999	153.00 – 253.99	4
10.000 – 14.999	254.00 – 380.99	6
15.000 – 19.999	381.00 – 507.99	8
20.000 – 29.999	508.00 – 761.99	10
30.000 – 37.999	762.00 – 965.00	12

8.1. Face screws.

When securing composite inserts with face screws, it is important to ensure the screw threads are completely encased by the metallic casing. Leaving 0.005 inches [0.13 mm] radial spacing between the screw thread and the inner diameter of the casing is recommended. The assembly shall be counter bored to ensure no axial protrusion of the screw head after completion. It is also recommended that the securing screw heads have a radial overlap to the insert by a minimum of 0.050 inches [1.27 mm], but not more than 2/3 of the insert radial cross section.

COPY COMPLIANT to the original document resident on the computer system at the time of printing

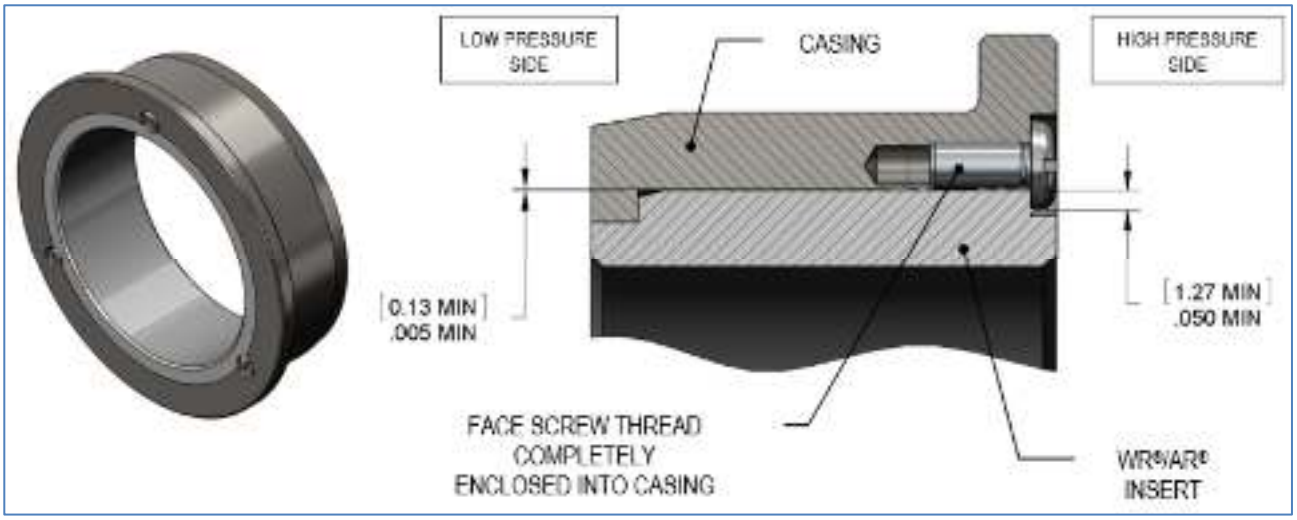

Figure 8-1 Face screws securing.

8.2. Radial Pins.

When securing composite inserts with radial pins, it is critical to ensure the pin is deep enough to fix the component in place while not being too close to the dynamic surface of the insert. It is recommended radial pins be inserted to a depth of minimum 0.050 inches [1.27 mm] and a maximum of ½ the radial cross section of the insert. Axial placement should be approximately centered along the entire length of the assembly.

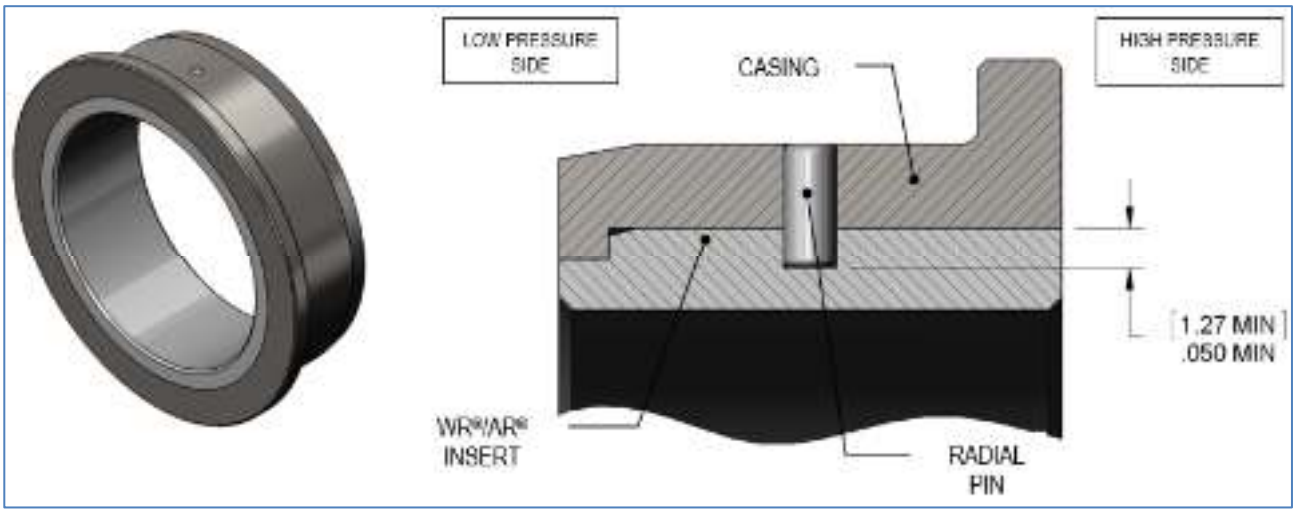

Figure 8-2 Radial pins securing.

COPY COMPLIANT to the original document resident on the computer system at the time of printing

8.3. Cross section screws.

When parts are radially split and placed in a carrier, it is preferable to use cross section screws for parts longer than 1.5” [38 mm]. The face screw guidelines apply to cross section screws for spacing and location.

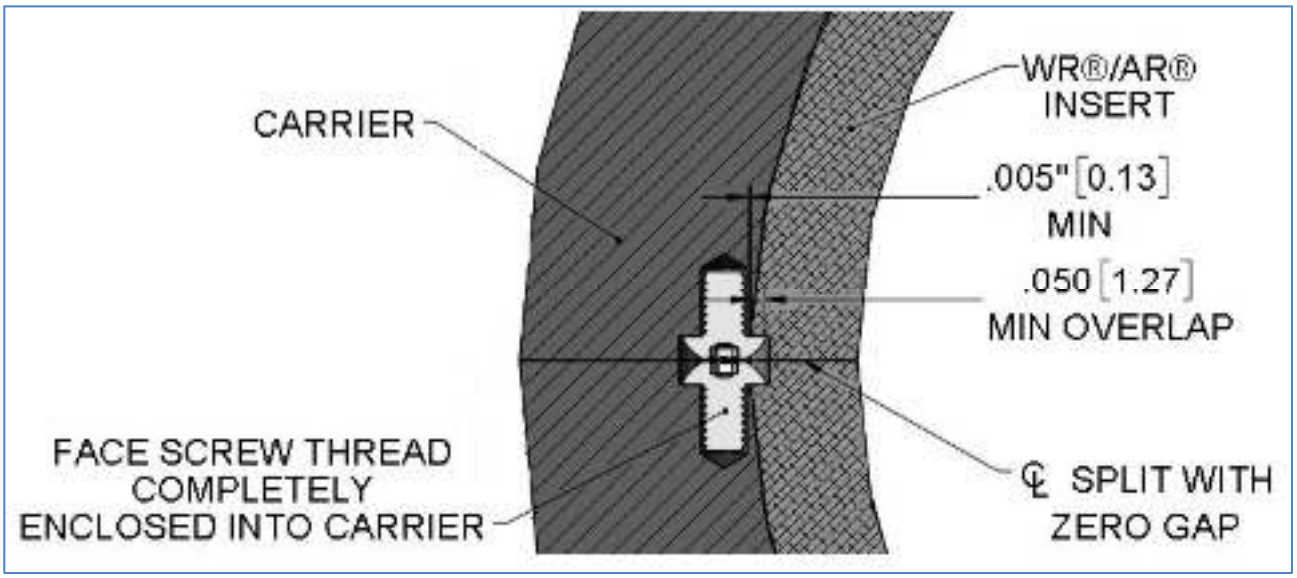

Figure 8-3 Cross section screws securing.

8.4. Adhesive / Glue.

Gluing composite inserts in place is not generally recommended, but is an option when dictated by customer requirement/request. The first consideration is temperature. When service or storage temperature is too high or too low, there may be too large a difference in hardware and composite diameters for the effective retention by adhesive. For this reason, applications should be limited to ambient range +60 to +120°F [+16 to +49°C].

The second consideration is the interaction of the media with the adhesive. The chosen adhesive should be checked to confirm suitability with the media in which it will be operating. Refer to GTS-6084E section 11.0 for design principles that can be applied for designs that incorporate adhesive retention.

9. References.

API STANDARD 610 Centrifugal Pumps for Petroleum, Petrochemical, and Natural Gas Industries, 12th Edition, 2021

Shigley's Mechanical Engineering Design, 10th Edition, 2014, Budynas R., Nisbett K.

COPY COMPLIANT to the original document resident on the computer system at the time of printing

Roark's Formulas for Stress and Strain, 8th Edition, 2011, Young W.C., Budynas. R.

Module Mod.481

10. Appendix.

10.1. Calculation tool.

The following instructions shall be considered to carry out the calculation by means of the dedicated tool Mod.481:

1) Compile all the input data in all the applicable fields.
2) Select the "Component to be defined" as per Figure 10-1, which determines how to perform the calculation:
   a. If "Stator sleeve / wear ring" is selected, the calculation will determine the inner diameter of the stator sleeve, in order to comply with the required minimum running clearance.
   b. If "Rotor sleeve / impeller" is selected, the calculation will determine the outer diameter of the rotor sleeve, in order to comply with the required minimum running clearance.
   c. If "N/A" is selected, all the diameters must have already been defined and the spreadsheet allows to perform the verification of the running clearance.

Figure 10-1 Input data.

3) Run the calculation with the dedicated button. The results are shown in the dedicated section. The minimum final clearance shall be within +/-3% of the required clearance to be considered acceptable (refer to Figure 10-2).

COPY COMPLIANT to the original document resident on the computer system at the time of printing

	RESULTS							
	CENTRIFUGAL EFFECT		INTERFERENCE		INTERFERENCE + AFFECT		INTERFERENCE + AFFECT + WARRANTY	
D [mm]	Min	Max	Min	Max	Min	Max	Min	Max
STATOR SEEVE / WEARING	211.380	211.430	211.360	211.430	211.451	211.521	211.451	211.521
ROTOR SEEVE / IMPELLER	210.364	210.211	210.361	210.210	211.386	211.336	211.386	211.336
Running clearance [mm]	0.191	0.210	0.195	0.214	0.158	0.213	0.158	0.213
Running clearance [%]	77.5%	91.1%	81.7%	91.4%	63.1%	91.4%	63.1%	93.4%

Figure 10-2 Results.

10.2. Case studies.

10.2.1. Job 23S021.

The project included BB4 pumps installed in Italy with the following operating conditions:

- Design temperature: 40°C.
- Application: water system.
- Operating fluid: drinking water.

The selected polymeric material was Dures®H2O from manufacturer CDI. It is a high performance thermoplastic polymer sulfide, which has been developed for pumps operating in drinking water systems (NSF/ANSI/CAN 61 certified).

All the polymeric components have been designed to be installed without any metal holder a/o carrier. They were intended not to be re-machined after installation, which required to properly define the machined dimensions of the components, in order to comply with the required running clearances.

The design philosophy used for the pump item 86897 is reported in the following, but the same is applicable for the other items as well:

- First stage stationary front wear rings:
  The minimum running clearance is defined as 70% of the minimum required by API 610 standard.
  In order to match the required minimum radial clearance of 0.160 mm, the manufacturer recommended to foresee mounting with slight interference in the worst case.
  The adopted securing method consists in machining nr. 4 equally spaced axial slots and relevant through holes in the extended surface. This allows the installation of screws installed in the corresponding threaded holes on the steel casing (refer to Figure 10-3).

COPY COMPLIANT to the original document resident on the computer system at the time of printing

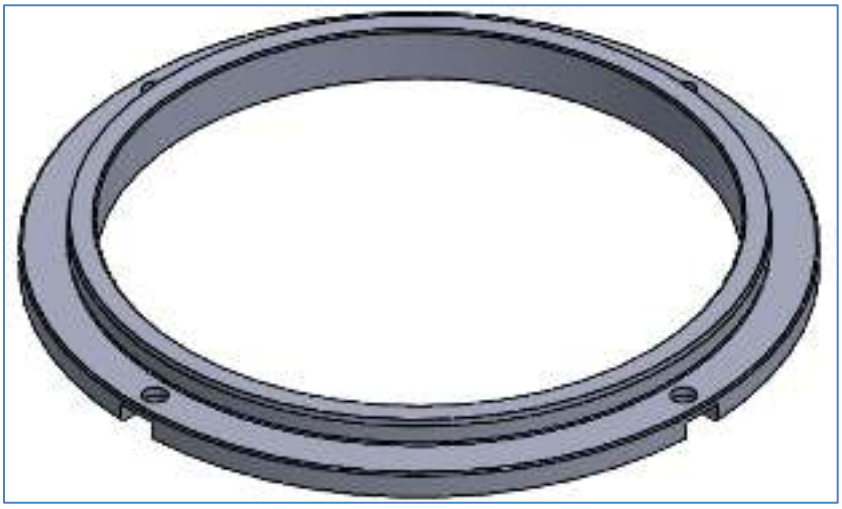

Figure 10-3 3D model of first stage front wear ring.

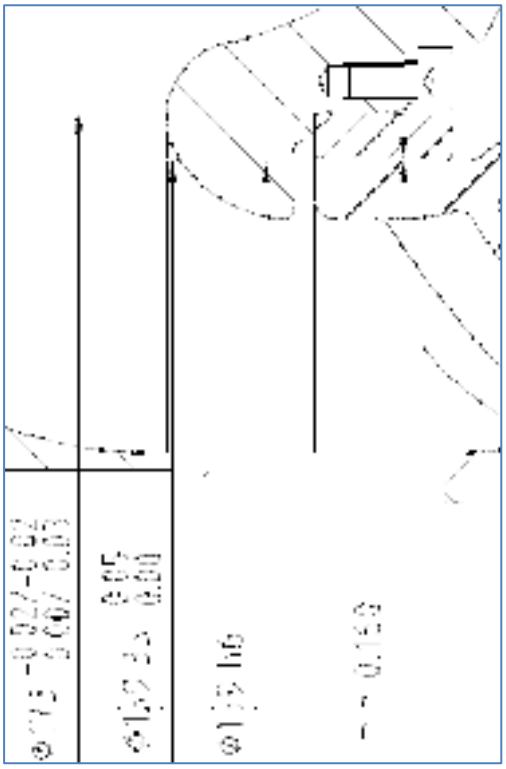

Figure 10-4 Installation configuration for first stage front wear ring.

- Interstage stationary front wear rings:

  The minimum running clearance is defined as 70% of the minimum required by API 610 standard.

  In order to match the required minimum radial clearance of 0.150 mm, the manufacturer recommended to foresee mounting with slight interference in the worst case.

COPY COMPLIANT to the original document resident on the computer system at the time of printing

The securing method is the same described for first stage front wear ring (refer to Figure 10-3).

Figure 10-5 Installation configuration for interstage front wear ring.

- PLB:

  The minimum running clearance is defined as 60% of the minimum required by API 610 standard.

  In order to match the required minimum radial clearance of 0.100 mm, the manufacturer recommended to foresee mounting with slight interference in the worst case.

  The securing method follows the same approach as per the wear ring's. As shown in Figure 10-6, nr. 4 securing screws are installed in the dedicated holes and tightened on the steel casing.

COPY COMPLIANT to the original document resident on the computer system at the time of printing

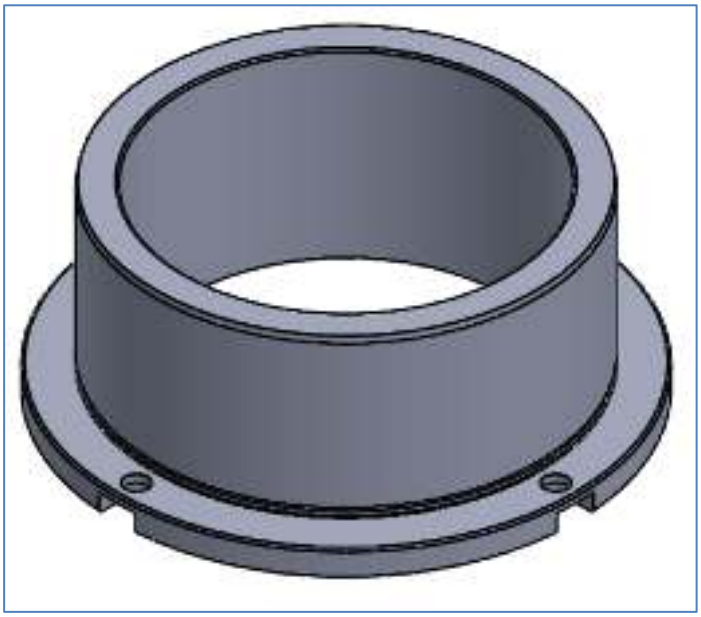

Figure 10-6 3D model of PLB.

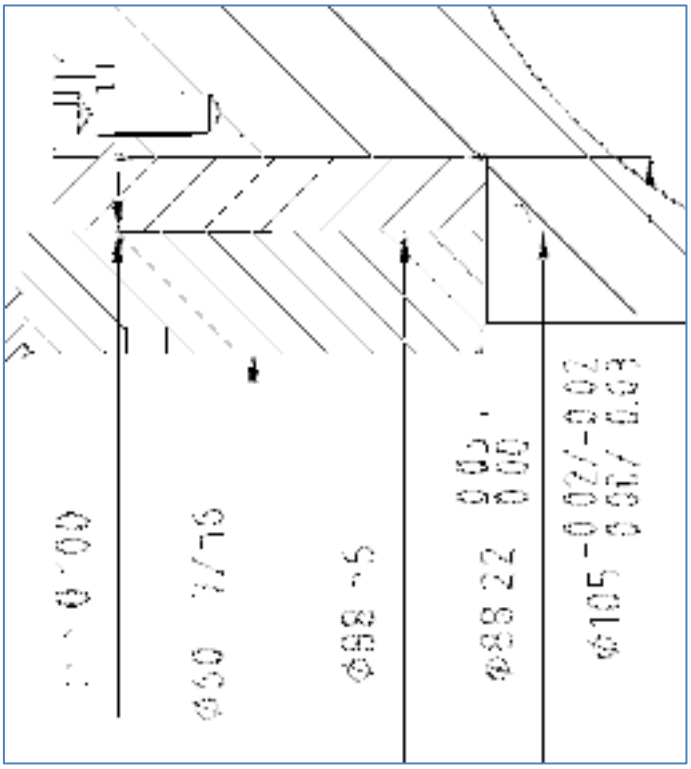

Figure 10-7 Installation configuration for PLB.

- Balance counterdisk:

  The counterdisk is designed to have a slight interference in the internal diameter.

COPY COMPLIANT to the original document resident on the computer system at the time of printing

The counterdisk is secured to the seat by means of nr. 4 axial screws, which are installed in the dedicated slotted through holes and tightened to the casing's threaded ones (refer to Figure 10-8).

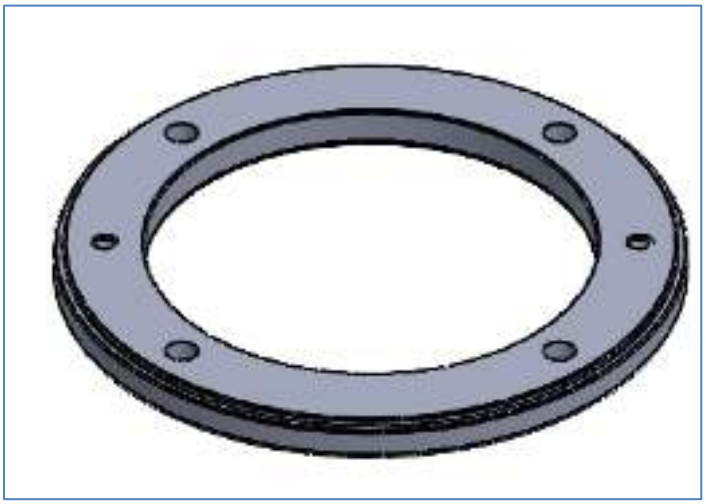

Figure 10-8 3D model of balance counterdisk.

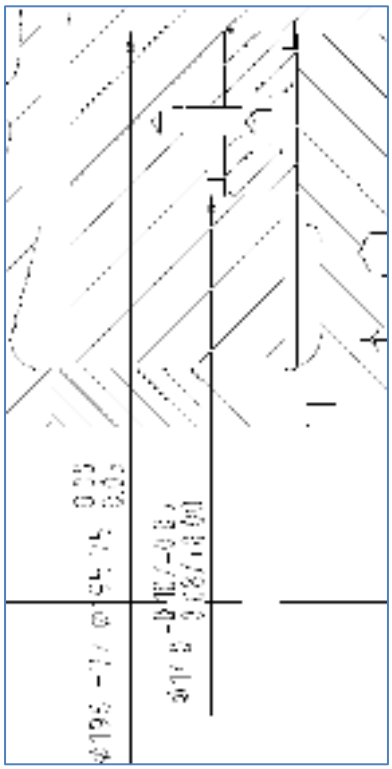

Figure 10-9 Installation configuration for balance counterdisk.

COPY COMPLIANT to the original document resident on the computer system at the time of printing